CBUCK Engineering
Specialty Structural Engineering
CBUCK, Inc. Certificate of Authorization #8064

Evaluation Report

MMR "Shake Shingle" Panel

Metal Roof Assembly

Manufactured by

Modern Metal Roofing
1442 Amy Lane
Franklin, IN 46131
for
Florida Product Approval

FL 41831.2-R1

Florida Building Code 8th 2023

Method:	**1 - D**
Category:	**Roofing**
Sub - Category:	**Metal Roofing**

Product:	"Shake Shingle"
Material:	Steel
Panel Thickness:	24 gauge

This item has been digitally signed and sealed by James L. Buckner, P.E., on this date below. Printed copies of this document are not considered signed and sealed, and the signature must be verified on any electronic copies.

Prepared by:
James L. Buckner, P.E.,
Florida Professional Engineer # 31242
Florida Evaluation ANE ID: 1916
Report No. 23-599_Shake-79-ER8
Date: 8/20/2023

Contents:
Evaluation Report Pages 1 – 7

JAMES L. BUCKNER
LICENSE
No 31242
STATE OF FLORIDA
PROFESSIONAL ENGINEER

James L. Buckner, P.E.
FL31242

2023.08.20 14:40:26 -04'00'

CBUCK Engineering
Phone: (561) 491-9927 · Email: cbuck@cbuckinc.net · Website: www.cbuckinc.net
Main Office s: 1374 Community Dr., Jupiter, Florida 33458

Manufacturer:	**Modern Metal Roofing**
Product Name:	**Shake Shingle**
Product Category:	Roofing
Product Sub-Category	Metal Roofing
Compliance Method:	State Product Approval Rule 9N-3.005 (1) (d)
Product/System Description:	"Shake Shingle" Roof Panel 24 gauge steel roof panel, with the appearance of a traditional wood shake roof attached to structural rafters using a wood batten system.
Product Assembly as Evaluated:	Refer to Page 4 of this report for product assembly components/materials & standards: 1. Roof Panel 2. Fasteners 3. Wood Battens
Support:	**Roof Deck:** Type: Plywood per FBC Chapter23 Thickness: 15/32" minimum **Rafter/Truss Top Chord** (For roof structural attachment): Type: Dimensional Lumber Size: 2" x 4" min. Density: 0.39" min. Spacing: 24" o.c. (As tested and Evaluated) (Design of support and its attachment to support framing is outside the scope of this evaluation.)
Slope:	**4:12 or greater** (Slopes between 4:12 and 3:12 shall be approved by Modern Metal Roofing) In compliance with FBC Chapter 15 based on the type of roof covering, applicable code sections and in accordance with manufacturer's recommendations.
Performance:	Wind Uplift Resistance: **Design Uplift Pressure Resistance: - 79 PSF** Based on: Batten spacing: nominal 14" oc Batten Screw spacing: 12 " oc (Refer to attachment details for screw location to supports and location of Panel to Batten locations) -refer to drawings on pages6 &7)

Performance Standards: The product described herein has demonstrated compliance with:

- **UL580-06** – *Test for Uplift Resistance of Roof Assemblies—with Revisions through February 1998*
- **UL 1897-12** – *Uplift test for roof covering systems*

Standards Equivalency: The UL 1897-12 standard version used to test the evaluated product assembly is equivalent with the prescribed standards in UL 1897-15 adopted by the Florida Building Code 8th Edition (2023).

Code Compliance: The product installed as described herein demonstrates compliance with the
Florida Building Code 8th Edition (2023)
International Building Code 2021

Evaluation Report Scope: This product evaluation demonstrates compliance of this product with the structural requirements of the Florida Building Code of products which comprises the building envelope and structural frame, as related to Florida Product Approval Rule 61G20-3.001.

Limitations and Conditions of Use:

- <u>Scope of "Limitations and Conditions of Use" for this evaluation:</u>
  This evaluation report for "Optional Statewide Approval" contains technical documentation, specifications and installation method(s) which include "Limitations and Conditions of Use" throughout the report in accordance with Rule 61G20-3.005. Per Rule 61G20-3.004, the Florida Building Commission is the authority to approve products under "Optional Statewide Approval".
- This report is a building code product evaluation per FLPE rule (FAC) 61G15-36 to comply with Florida product approval rule (FAC) 61G20-3. This evaluation report is part of the Florida Building Commission approval for the listed code related criteria. This report by James Buckner, P.E. and CBUCK Engineering is not a design certification of code compliance construction submittal documentation, per FBC section 107, for any individual structure, site specific or permit design.
- All metal components and fasteners shall be corrosion resistant in accordance with applicable sections of FBC, including but limited to Sections 1504.3.2, 1506.6 and 1507.4.4.
- Design of support system is outside the scope of this report.
- Fire Classification is outside the scope of Rule 61G20-3, and is therefore not included in this evaluation.
- This evaluation report does not evaluate the use of this product for use in the code section named High Velocity Hurricane Zone. (Dade & Broward Counties)
- <u>Option for application outside "Limitations and Conditions of Use"</u>
  Rule 61G20-3.005(1)(e) allows engineering analysis for "project specific approval by the local authorities having jurisdiction in accordance with the alternate methods and materials authorized in the Code". Any modification of the product as evaluated in

this report and approved by the Florida Building Commission is outside the scope of this evaluation and will be the responsibility of others.

Quality Assurance: The manufacturer has demonstrated compliance of roof panel products in accordance with the Florida Building Code and Rule 9N-3.0005 (3) for manufacturing under a quality assurance program audited by an approved quality assurance entity through Farabaugh Engineering & Testing, Inc. (FBC Organization ID# QUA 7733).

Components/Materials & Standards:

Roof Panel: **"Shake Shingle"**

Material:	Steel
Thickness:	24 Gauge
Panel Length:	45-5/8" (Nominal)
Panel Width:	17-1/4" (Nominal)
Rib Height:	2-1/8" (Nominal)
Yield Strength:	40 ksi minimum
Steel Designation:	CS-Type B
Corrosion Resistance:	In compliance with FBC Section 1507.4.3: ASTM A653 G90 galvanized steel

Battens:

Type:	Dimensional Lumber
Size:	2" x 2" min.
Density:	0.39" min.
Spacing:	14" o.c. Nominal (As tested and Evaluated)

Fasteners:

Roof Panel to Battens

Type:	Hex-Head Screw with WSW
Size :	#9 – 15 x 2" min.
Corrosion Resistance:	Per FBC Section 1507.4.4 and 1506.6
Standard:	Per ANSI/ASME B18.6.1

Battens Attach **to Plywood Deck 12" oc & Rafter/truss top chord 24" oc**

Type:	Wood Wafer Head Screws
Size :	#10 x 3-1/2 " min. (see drawings)
Embedment:	1-1/2" min. into Wood Rafter Top Chord
Corrosion Resistance:	Per FBC Section 1506.6
Standard:	Per ANSI/ASME B18.6.1

Underlayment:

Material and application shall be in compliance with FBC Section 1507.1.1 and in accordance with applicable code sections and manufacturer's recommendations.

Installation: **MMR "Shake Shingle" Roof Panel System**
(Refer to drawings in this report.)

- Panel Fastener Spacing:
  (along the batten rows and across the panel profile)
  Refer to drawings
- Rib Interlock: Lapped
- Batten Spacing: Nominal 14" o.c.

Install the MMR "Shake Shingle" roof panel assembly in compliance with the installation methods listed in this report and applicable code sections of FBC 8th 2023. The installation methods described herein is in accordance with the scope of this evaluation report. Refer to manufacturer's installation instructions as a supplemental guide for attachment.

Referenced Data:

1. UL580/1897 Uplift Test
   By Farabaugh Engineering & Testing, Inc. (FBC Organization ID# TST 1654)
   Report # T328-22, Dated 12/14/22
2. Quality Assurance
   By Farabaugh Engineering & Testing, Inc. (FBC Organization ID# QUA 7733)
3. Certification of Independence
   By James L. Buckner, P.E. @ CBUCK Engineering
   (FBC Organization # ANE 1916)

CBUCK Engineering
Specialty Structural Engineering
CBUCK, Inc. Certificate of Authorization #8064

Installation Method
Modern Metal Roofing
Shake Shingle Roof Panel Installation

Shake Shingle Panel Profile

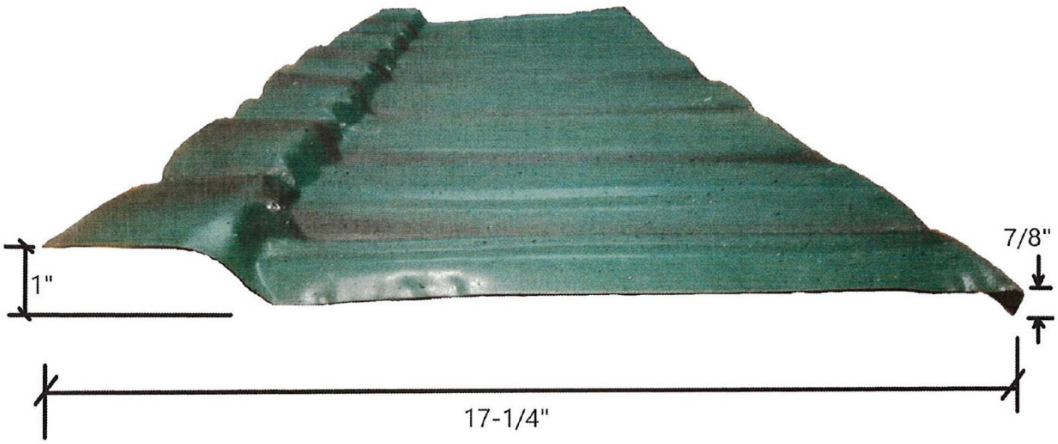

TYP. SIDE ELEVATION VIEW

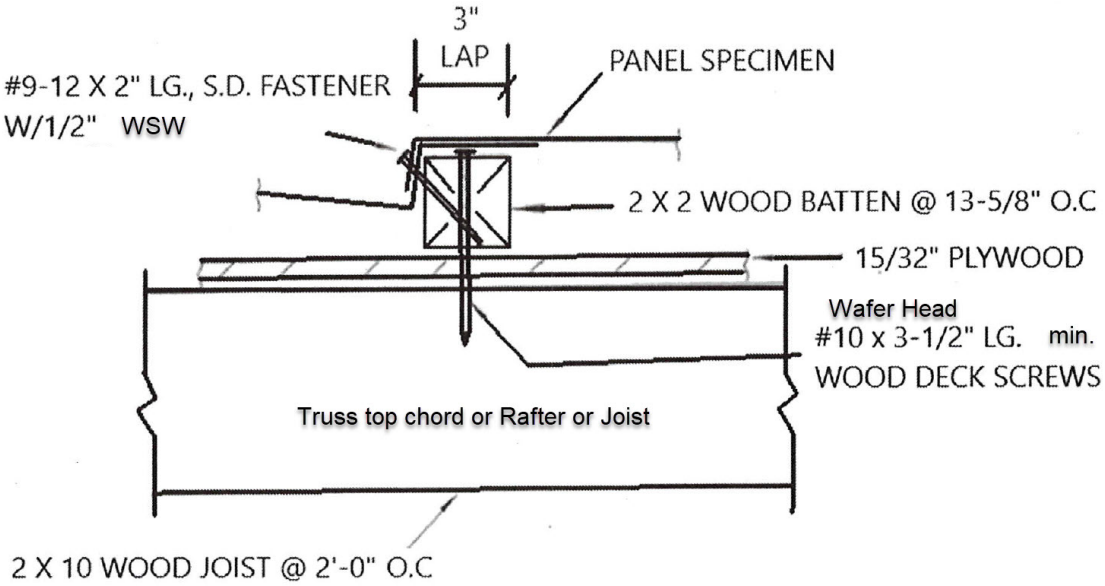

Section Attachment at wood joist locations = 24 in oc

CBUCK Engineering
Specialty Structural Engineering
CBUCK, Inc. Certificate of Authorization #8064

Installation Method
Modern Metal Roofing
Shake Shingle Roof Panel – Installation

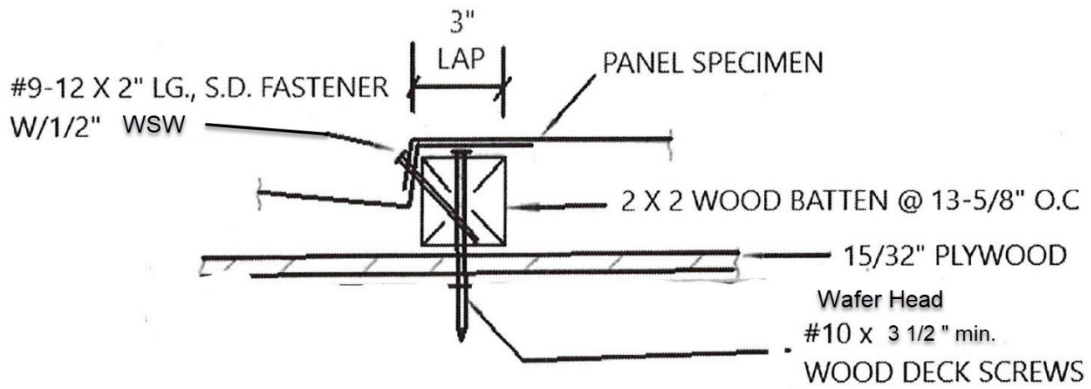

Section Attachment at Plywood deck only locations = 24 in oc

(Half way between the joist spaced 24 in oc)

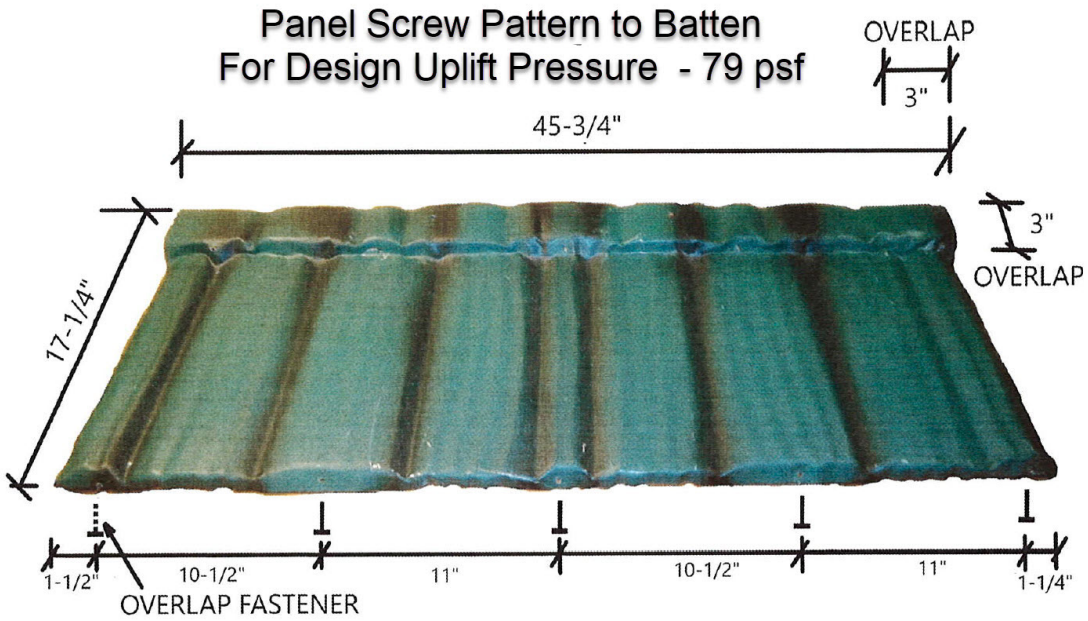

(ALL FASTENERS #9 X 2" LG. , S.D. FASTENERS W/' WSW

PLAN VIEW